Laser Marking System

F7205U-T

Operation Manual

Revision: v1.1, November 2025

Copyright © 2025, Cyklop Fastjet Technologies (Shanghai) lnc. (hereinafter referred to as "Fastjet"). All rights reserved.No part of this document may be reproduced in any form or by any means without the prior written consent of Fastjet.This Operation Manual is the intellectual property of Fastjet and contains proprietary and copyright-protected information that is the property of Fastjet. Reproduction, use, or disclosure without the written permission of Fastjet is strictly prohibited.

Manufacturer：Cyklop Fastjet Technologies (Shanghai) lnc.

Room 101, Building 2, No. 950, Diling Rd., Fengxian District, Shanghai, China

Tel：400-1160-610=-1370

Fax：021-57484498

http://www.fast-jet.com

Table of Contents

1. Safety Guidelines 1
1.1 Safety Precautions 1
1.2 Warning Labels 2
1.3 Laser Classification 2
1.5 Marking of Highly Reflective Materials 4
1.6 Protective and Alarm Devices 4
1.7 Hazard to Eyes and Skin 4
1.8 Maintenance and Repair 5
1.9 Noise Hazard 5
1.10 Fire and Explosion Hazard 6
1.11 Electrical Safety 6
1.12 Decomposition Products 6
1.13 Liability 6
1.14 Relevant laws and regulations 7
2. Equipment Introduction 8
2.1 Operating Principle of the Laser Marking System 8
2.2 Marking on Product Surface 8
2.3 Technical Specifications 9
2.4 Working Distance and Marking Area 10
2.5 Laser Unit Dimensions and Installation Location 10
3. Startup and Shutdown Procedure 14
3.1 Installation 14
3.2 Transport and Storage 14
3.3 Unpacking 14

3.4 Installation Conditions 14
3.5 Extraction System 17
3.6 Startup 17
3.7 Shutdown 17
3.8 Working Distance Adjustment 17
3.9 Electric Eye and Fiber Optic Sensor 18
4. Laser System Operation 20
5. Cooling System 20
5.1 Cooling System Water Flow Diagram 20
5.2 Cooling System Technical Specifications 21
5.3 Coolant Mixture Reference Guide 22
5.4 Cooling System Installation Instructions 23
5.5 Chiller Display Screen Operating Instructions 23
5.6 Fault Codes and Output Port Description 27
5.7 Troubleshooting 28
5.8 Chiller Maintenance and Care 30
6. Maintenance 32
6.1 Maintenance Reminder 32
6.2 Maintenance Schedule 32
6.3 Focusing Lens Cleaning 33
6.4 Maintenance, Repair and Replacement Record 34
7. Faults and Alarm Signals 35
7.1 Note 35
7.2 Fault Description 35
8. Accessories 40
8.1 Terminal Block 40

8.2 Input/Output Timing.....41

1. Safety Guidelines

1.1 Safety Precautions

Warning !

This laser system is classified as a Class 4 Laser Product.
Hazardous Class 4 laser radiation is emitted when the beam delivery system is opened! This can cause severe burns to the eyes and skin, and may result in property damage.
Read and understand this operation manual thoroughly before use! Strictly observe all safety precautions!

1.2 Warning Labels

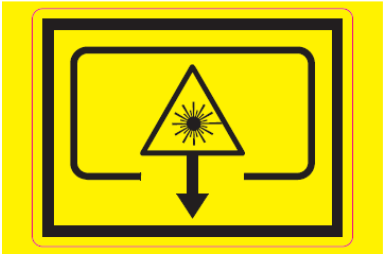

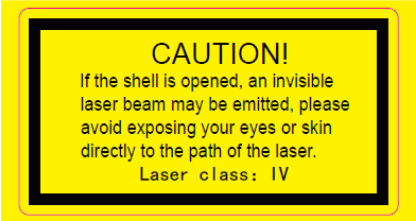

1.3 Laser Classification

The system employs a laser source that operates in either pulsed or continuous-wave (CW) mode. This laser device is classified as a Class 4 laser product, which generates an invisible infrared beam that poses an extreme hazard to eyes and skin.

The primary hazard of laser radiation to the human body is to the eyes and skin. Exposure of any part of the body to laser radiation will cause burns. Avoid placing any body part in the beam path of the laser equipment to prevent injury from misuse.

This injury can be caused not only by direct laser radiation, but also by scattered or reflected radiation from the workpiece or processing surfaces. The extent of injury is determined by the exposure duration, laser energy, and wavelength.

In principle, based on the potential hazard of the laser device, laser devices are classified into four laser safety classes: Class 1 is the safest, Class 4 may be the most hazardous. A summary of these class definitions is shown below:

Class 1	Exposure to the laser radiation is harmless.
Class 2	Exposure to the laser radiation is only harmless when the exposure duration is limited to a short period (up to 0.25 seconds).
Class 3A	The laser radiation is hazardous to the eyes when optical devices focus the radiation beam. If this is not the case, the emitted laser radiation in the visible spectral range (400 nm to 700 nm) with short exposure duration (up to 0.25 seconds) is harmless; whereas in other spectral ranges, the laser radiation is harmless even with prolonged exposure.
Class 3B	Exposure to the laser radiation is hazardous to the eyes and, under certain conditions, may also cause injury to the skin.

Class 4	Exposure to the laser radiation, even when diffusely reflected, may cause skin injury and poses a serious hazard to the eyes. Laser radiation can create a risk of fire or explosion.

Depending on its specific configuration, this series of laser marking systems is classified as Class 4.

If the beam exit, including the object to be marked, is appropriately shielded, the entire enclosed laser system qualifies as a Class 1 laser system.(under normal operating conditions, excluding maintenance, repair, and servicing work). No additional protective measures are required during operation. Shielding prevents exposure to laser radiation or reflected laser beams.

NOTE:

The shielding is not included in the scope of delivery!

Once any part of the enclosed radiation shielding or laser housing is opened, the entire laser system immediately reverts to Class 4 status. Under such conditions, you must implement appropriate protective measures to prevent high-intensity radiation exposure to personnel within the laser area.

1.4 使用

This laser system is exclusively designed for material surface processing. The material surface is locally heated and undergoes modification through intensive irradiation by the Class 4 laser beam. The primary application of this system is product surface marking (e.g., expiration dates, batch numbers, serial numbers).

The laser beam emitted by the device possesses high energy. Improper use may cause personal injury and property damage!

- Do not direct the laser beam at the human body or animals!

Otherwise, serious injury to the eyes or skin will occur!

- Do not direct the laser beam at flammable materials!

Always ensure adequate shielding of the laser beam! Furthermore, when marking flammable materials (such as paper), the process may inadvertently ignite a fire. Implement appropriate safety measures, including the installation of smoke detectors and fire alarms!

- Do not direct the laser beam at reflective surfaces!

The reflected laser beam also poses risks and may, under certain circumstances, be even more hazardous than the original beam.

- Do not direct the laser beam at unfamiliar materials!

Certain materials (e.g., polyethylene, polypropylene, glass) may be penetrated by the laser beam even though they appear opaque to the human eye!

- **DANGER**: Explosion Hazard

Ensure that no explosive materials or vapors are present within the work area of the laser beam.

- Unauthorized modification or alteration of the laser system is strictly prohibited for safety reasons.

If the rated power data or intended function of a classified laser device is altered through modification by the user, the individual or department performing such modifications shall be responsible for the device's reclassification and remarking.

- Operation of the laser system with open laser or beam delivery systems is permitted only for

professionally trained personnel. Strictly observe all applicable laser safety regulations at all times!

1.5 Marking of Highly Reflective Materials

When processing highly reflective materials, the laser radiation may be back-reflected into the laser source. Under these conditions, particularly if the working distance is incorrectly set, irreversible damage to the system components cannot be ruled out.

When marking highly reflective materials, observe the following precautions:

- Prior to marking reflective materials, verify that the working distance is correctly set. For this purpose, use a material with low reflectivity (e.g., coated paper).
- Avoid marking reflective materials in the center of the marking field whenever possible. When positioning the workpiece, ensure that the marking is located at the edge of the marking area.
- Start by setting the laser power to its minimum value, then gradually increase it until a satisfactory marking result is achieved. If no legible marking is obtained even at maximum power, this indicates that the laser cannot effectively mark the material.

1.6 Protective and Alarm Devices

To ensure the operational safety of the laser marking system, the following points must be observed during operation:

- The laser marking system must be fully integrated into the production environment.
- The laser beam must never irradiate the human body and must be shielded. Depending on the laser type, use glass, polycarbonate, or steel for shielding.

(e.g., acrylic, Plexiglas, or stainless steel). The protective housing must be burn-through resistant and capable of withstanding diffuse reflection.

- A material thickness of 5 to 10 mm is generally sufficient to withstand scattered laser radiation.
- Access to the marking area must be prevented during operation.
- When the laser marking system is not in use, the laser control switch must be switched to the "Off" position.
- Install appropriate protective or warning devices and interlock switches.
- The protective shielding system shall be used in conjunction with an appropriate fume extraction system.

Note: During installation, ensure that at least one warning signal remains clearly visible at all times.

1.7 Hazard to Eyes and Skin

The laser system generates Class 4 laser radiation. This laser radiation is emitted in the infrared spectrum and is therefore invisible to the human eye.

High-intensity radiation causes localized extreme heat and burns tissue. The eyes are particularly vulnerable to laser radiation, where localized heating can burn the cornea and retina, leading to impaired vision or permanent blindness!

WARNING：

When the laser or beam delivery system is open during maintenance, calibration, or servicing operations, all personnel in the laser area must wear appropriate laser safety goggles! NEVER look directly into the laser beam!

Proper laser safety goggles protect against direct, reflected, or scattered laser radiation. Appropriate goggles must meet the following criteria:

- Specifically designed for the wavelength range of the UV laser.

The wavelength of the UV laser is 355 nm.

Caution: Always check the identification label to prevent confusion! Protective goggles designed for other laser types (e.g., those intended for Nd:YAG lasers) provide insufficient protection against the radiation of a CO_2 laser!

- Specifically designed for the power range of the laser.

The maximum output power of the laser can reach the following values:

F7205U-T：5W，355nm

- Suitable for both continuous-wave and pulsed modes of operation.

The adjustable pulse frequency range is 30 kHz to 150 kHz. The actual pulse frequency is determined by the specific application and the laser model.

While the skin is more resistant to radiation than the eyes, prolonged exposure can still cause burns and destroy skin tissue, depending on the duration and intensity of radiation. Therefore, wear appropriate protective clothing to shield the skin. Direct exposure of the skin or clothing to the laser beam must be avoided under all circumstances!

1.8 Maintenance and Repair

The maintenance tasks described in this operation manual may only be performed by professionally trained personnel. Repair work must be exclusively carried out by FASTJET service technicians or their authorized agents.

NOTE：

To enable you to independently and proficiently perform all required maintenance and repair tasks while ensuring the highest level of safety for operating and maintenance personnel, we offer specialized training courses.

- Technician Training:

The training enables participants to acquire all necessary specialized knowledge to perform all required maintenance and repair tasks on the laser system independently, reliably, and professionally.

- Comprehensive Training

Technician Training + Laser Safety Officer (LSO) Training. In addition to the technical expertise covered in the Technician Training, this program provides participants with the required expertise to perform the duties of a Laser Safety Officer.

1.9 Noise Hazard

High-frequency noise may be generated during the marking process.

Protect your ears by wearing appropriate hearing protection devices.

1.10 Fire and Explosion Hazard

The high output power of Class 4 lasers can ignite numerous materials. When performing maintenance or repair work with the laser housing or beam delivery system open, strict fire prevention measures must be implemented!

Materials such as paper (circuit diagrams, notepads, wall posters, etc.), non-fire-retardant curtains, wooden boards, or similar combustible items can easily be ignited by direct or reflected laser beams.

Ensure that no containers holding flammable or explosive solvents or cleaning agents are placed within the working area of the laser system! If the intense and invisible laser beam accidentally strikes such containers, it may immediately create an ignition source or result in an explosion.

1.11 Electrical Safety

This laser marking system is manufactured in accordance with generally accepted technical standards.

When working near open laser units or system components, contact with components carrying mains voltage is possible. Strictly observe all regulations for working on or near live electrical equipment!

All work on open laser systems, especially near electrical components, may only be performed by authorized and specially trained personnel!

1.12 Decomposition Products

NOTE：

The process of laser material processing generates decomposition products that may be hazardous to health!

During laser marking, fine dust and vapors are produced. Depending on the type and composition of the material, these may contain decomposition products that are hazardous to health.

Therefore, we strongly recommend installing an extraction system with an adequately rated capacity, equipped with a dedicated dust and activated carbon filter. Decomposition products must be extracted directly at the point of origin.

Protect yourself and your colleagues from the health hazards posed by these decomposition products!

Furthermore, the extraction system helps prevent contamination and potential damage to the optical components of the beam delivery system by dust particles. We offer a range of extraction systems available as accessories.

1.13 Liability

The company shall not be liable or provide warranties for any personal injury, material damage, or other losses resulting from the following causes:

- Use of the laser marking system for non-intended purposes.
- Incorrect installation, commissioning, operation, or maintenance of the laser marking system.
- Operation of equipment with safety defects, or with safety and protective devices that are improperly installed or inoperable.

- Failure to comply with the instructions in the Operation Manual regarding the transportation, storage, installation, commissioning, repair, and maintenance of the laser marking system.
- Opening the laser unit's components.
- Unauthorized structural modifications to the laser marking system are strictly prohibited.
- Unauthorized modification of the beam path and laser parameters.
- Failure to conduct proper inspection of system components.
- Natural disasters, war, and force majeure.

1.14 Relevant laws and regulations

IEC61000-6-1:2019 IEC61000-6-8:2020 EN IEC 61000-3-2:2019+A1:2021 EN 61000-3-3:2013+A1:2019+A2:2021	Electromagnetic Compatibility (EMC)
IEC60825-1:2014	Safety of Laser Products
IEC60950-1:2006/A1:2010	Safety of Information Technology Equipment
EN 60204-1:2018,	Safety of Electromechanical Equipment
EN ISO 12100:2010	Machinery Safety Standards

2. Equipment Introduction

2.1 Operating Principle of the Laser Marking System

The laser, operating in either pulsed or continuous-wave mode, generates an invisible, narrow-diameter laser beam. To achieve optimal focusing, the beam is first expanded using a beam expander. The expanded beam then enters the print head, where it is directed by two dynamically controlled mirrors that guide it along the predefined path of the selected pattern. This path is subdivided into discrete vectors (X and Y coordinates), and by sequentially connecting these vectors, the marking is formed on the product surface. The laser beam effectively "writes" the pattern onto the material through this controlled scanning motion.

在The BSL control system within the power supply unit performs vector calculations and controls the laser.

The deflected laser beam is focused by the focusing lens before reaching the product surface, with marking typically occurring at the focal point of the laser beam.

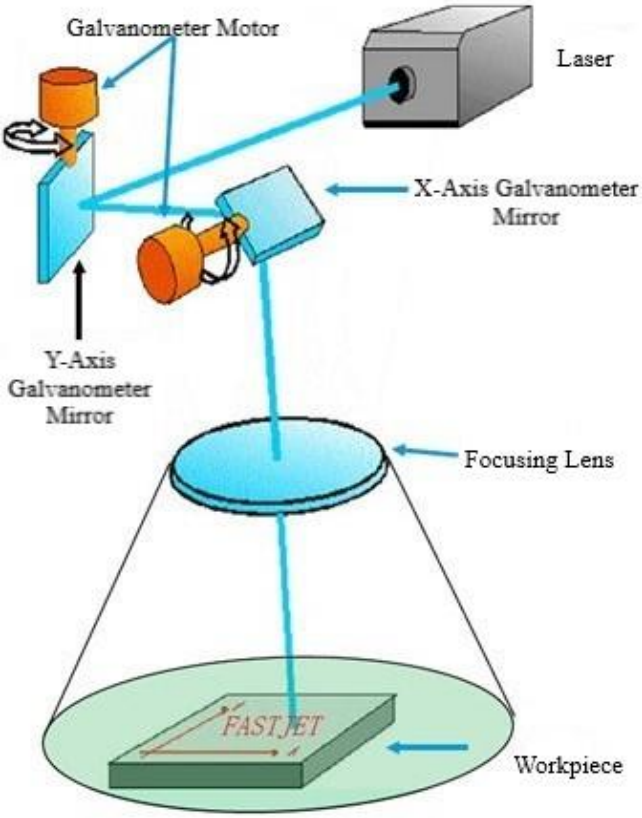

2.2 Marking on Product Surface

Marking on the product surface is achieved through the intense interaction of the laser beam with the material.

The laser beam is first focused onto the material surface, heating the uppermost layer to produce either a color change or a material modification.

The images and symbols to be marked are decomposed into individual vector lines, which are further broken down into discrete vectors.

During the transition from one vector line to the next, the laser beam is deactivated to prevent unintended marking on the material.

2.3 Technical Specifications

F7105U-T		
Laser types and characteristics	Main Materials	Anodized aluminum oxide structure + stainless steel
	Laser tube	Nanosecond UV laser generator
	Wavelength	355nm
	Cooling system	water-cooled (integrated)
	Positioning	UV positioning and infrared assisted focusing
Applications/Substrates	Applicable Scenarios	Especially suitable for production lines using Thermal Transfer Overprinting (TTO) printers
	Plastics	PE, PVC, PP, PS, POM, PC, acrylic, nylon, etc.
	Metals	stainless steel, aluminum, gold, silver, titanium, brass, etc.
	Wood products	MDF, plywood, fiberboard
	Others	Glass（Subject to material type, surface condition, and marking content complexity），Flexible PCB
Speed	Marking speed	up to 5,000 mm/second
	Production line speed	up to 200m/min
Marking characteristics	Character	Standard industrial fonts and single-stroke fonts, machine-readable codes (OCR, 2D matrix, etc.)
	Barcodes:	Code128A，Code128B，Code128C，Code39，Code93
	2D codes	QR Code，Data Matrix，Aztec-Code，Han Xin-Code
	Figures	images, symbols, lines, dots, etc.
	Clock	Automatic date, real-time clock
User interface	Control system	FCPilot
	Screen size	10.1 inches
Communication and I/O interface	Protocol	UDP，TCP/IP，RS232
	Input	Encoder and sensor inputs
Standard and optional configurations	Standard	Marking machine, 10.1-inch external touch screen, fiber optic sensor, universal adjustment sensor bracket, hex tool kit (UV lasers are equipped with water cooling system).
	Optional	Photoelectric sensor, 2000 ppr encoder, encoder bracket, encoder wheel, fume extractor (single head), optional lenses (see “Marking area and working distance“ in the table below for

		details)
Marking area and working distance	Lens	UV Focus Lens 100mm*100mm（Standard） UV Focus Lens 200mm*200mm（Optional）
Physical characteristics	Working temperature	5°C-40°C（41°F-104°F）
	Humidity	10%-90%，non-condensing
	Electrical requirements	220 VAC, ~50/60 Hz, 1 PH, 750W
	Net weight	24kg

Note: In case of any discrepancies between this manual and the actual product, the actual product specifications shall prevail.

2.4 Working Distance and Marking Area

The laser unit is configured with a standard F-theta lens of 100mm x 100mm field size and 80mm focal length. Optional configurations include a 200mm x 200mm lens.

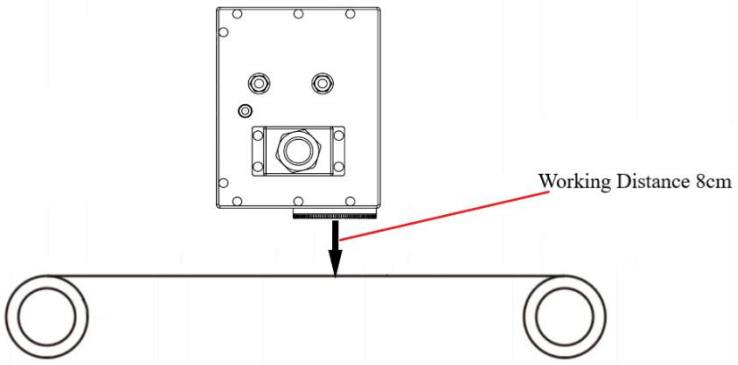

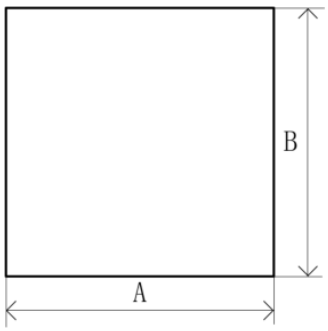

2.5 Laser Unit Dimensions and Installation Location

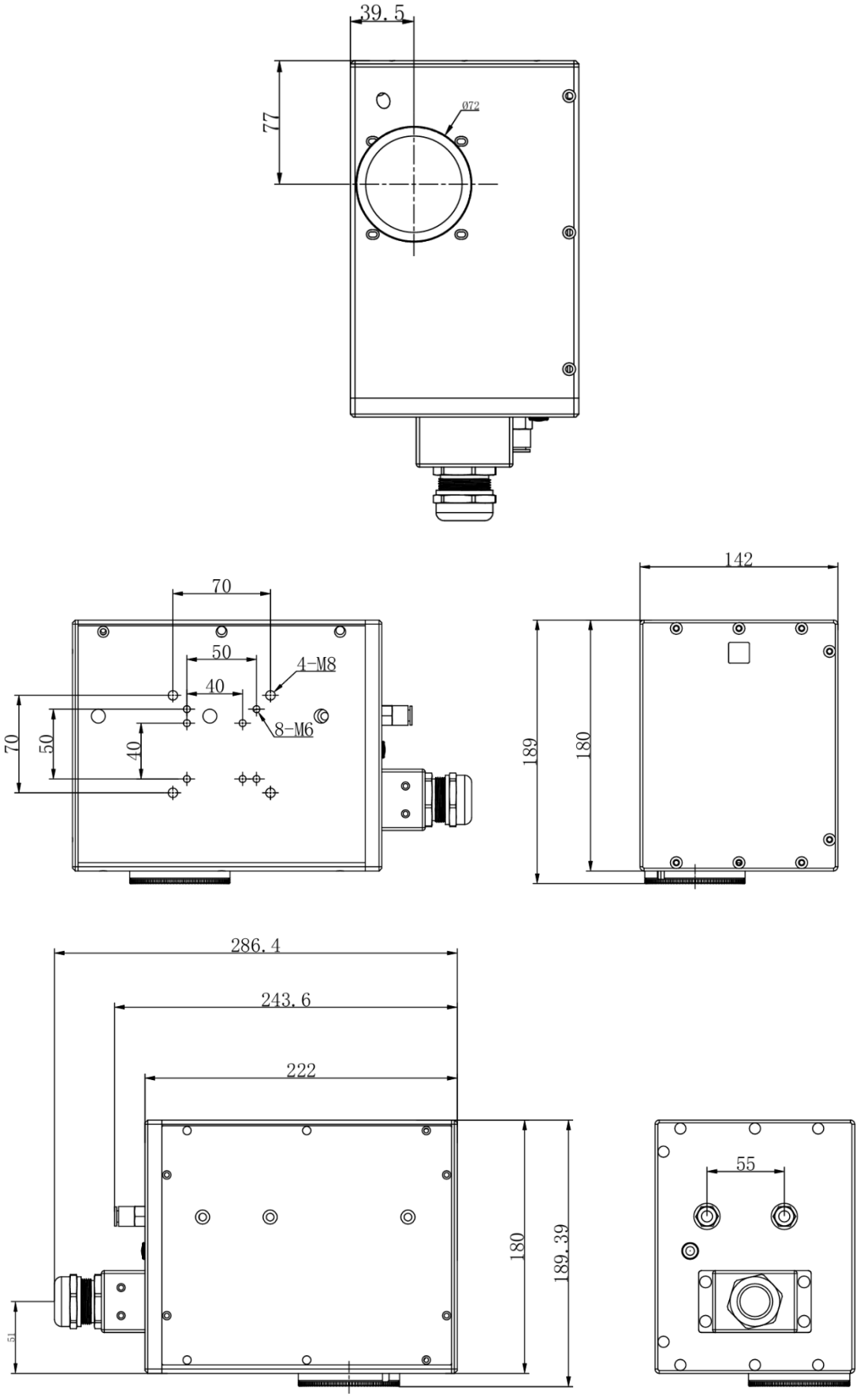
39.5
77
Ø72
70
50
40
4-M8
8-M6
70
50
40
142
189
180
286.4
243.6
222
180
189.39
51
55

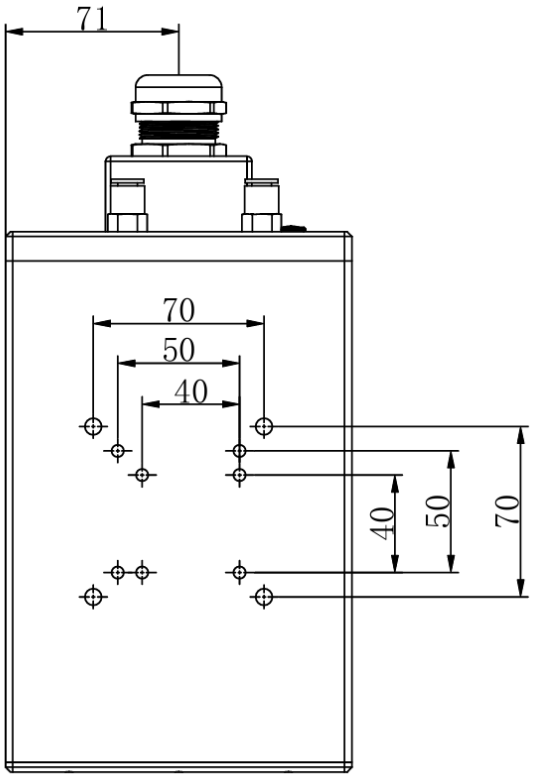
71
70
50
40
40
50
70

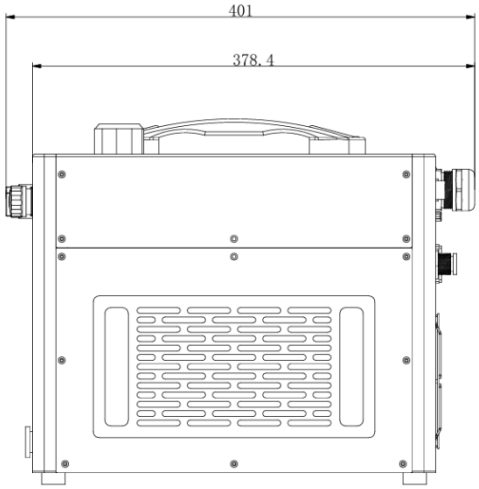
401
378.4

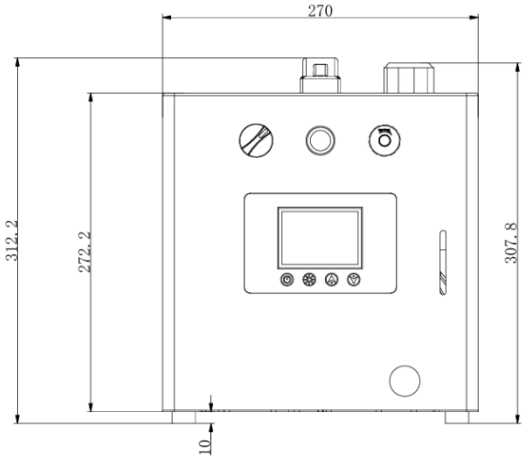
270
312.2
272.2
307.8
10

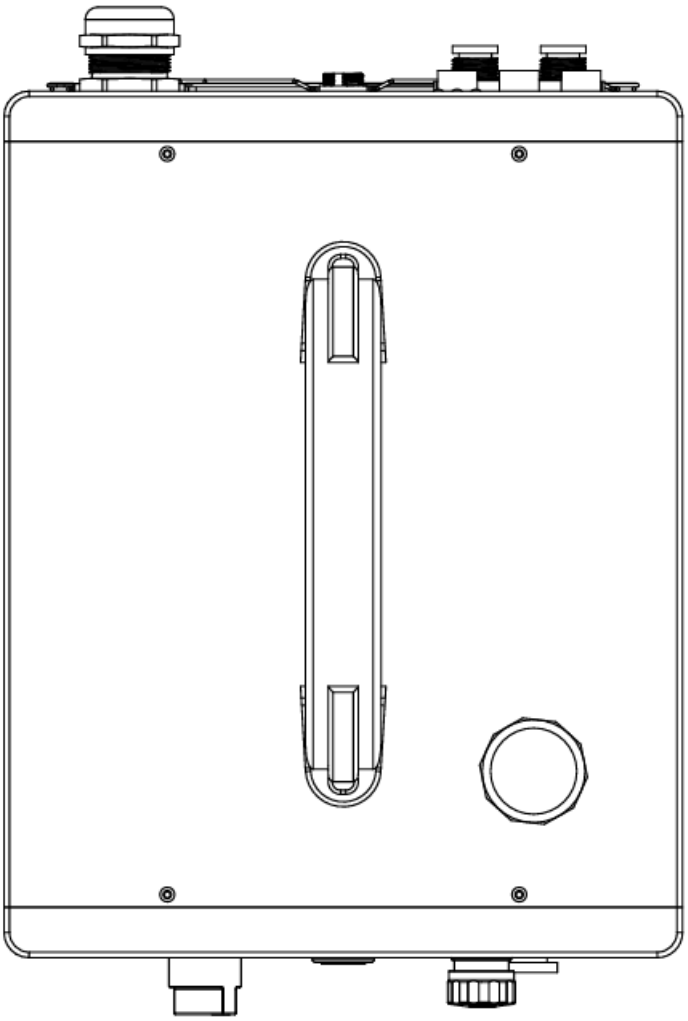

3. Startup and Shutdown Procedure

3.1 Installation

The installation and initial startup of the laser system require extensive professional knowledge and experience. Therefore, this work must be carried out by FASTJET personnel or their authorized agents.

To ensure smooth and uninterrupted installation, please prepare the following at the installation site:

- Proceed according to the steps described in the "Unpacking" chapter.
- Ensure all connection interfaces are available and properly prepared, following the requirements outlined in the "Installation Conditions" chapter and the dimensional and technical data documents received when processing the order.

Should you have any further questions, please consult FASTJET.

3.2 Transport and Storage

The laser system is a precision instrument involving laser optics! To protect the system from damage, care must be taken to avoid severe mechanical stress (e.g., impacts, vibrations, etc.). For any questions regarding transport and storage, please consult FASTJET.

Transport：

The laser system must be transported in a horizontal position after removal from its packaging.

Storage：

Store the laser system horizontally in a position protected from dust and moisture. Do not expose the laser system or its accessories to direct sunlight!

Storage temperature must not exceed +60°C.

Protect the laser system from frost; the storage temperature must not fall below 0°C. The relative air humidity should be maintained between 10% and 90%.

3.3 Unpacking

1. Open the shipping container and remove all cushioning/packing materials.
2. Remove the individually packaged components.
3. Inspect all components for any damage incurred during transport.
4. In case of damage, immediately notify the carrier and FASTJET or its authorized agent in writing. Retain all packaging materials and clearly describe the nature of any internal or external damage.
5. Transport the individual components to the installation site.
6. Ensure all components are protected from dust and moisture prior to commissioning/startup.

3.4 Installation Conditions

Floor Space Requirements

For the standard dimensions of the laser system, refer to the accompanying drawings.

For equipment customized to user-specific requirements, dimensional specifications are provided in the installation drawings or in the dimensional and technical data documents received when processing your order.

During installation of the laser marking system, adequate clearance must be reserved to prevent collisions and compression, and to ensure optimal heat dissipation conditions.

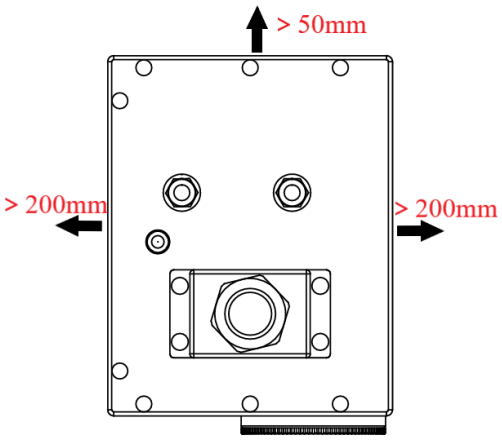

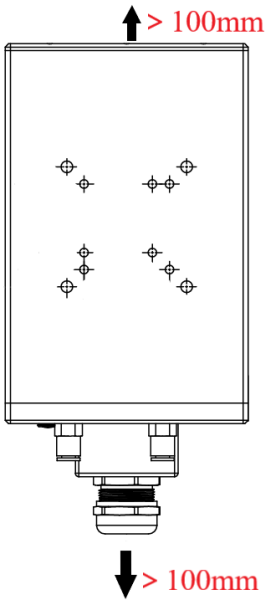

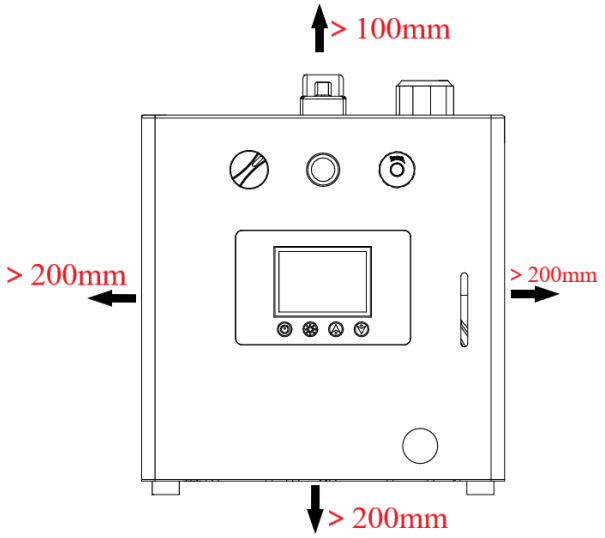

Connections

Operation of the laser system requires a power outlet. For the required specifications, refer to the dimensional and technical data documents received when processing your order.

When installing the power outlet and selecting the installation site, note that the cable length of the laser system is approximately 5 meters.

Environmental Conditions

Temperature Range: 5°C to 40°C

Relative Humidity: 10% to 90%, non-condensing

Installation

During installation of the laser head, ensure that the connecting cable between the control unit and the laser head is not subjected to pulling force, as this may cause cable disconnection and lead to system failure.

Overhead Installation

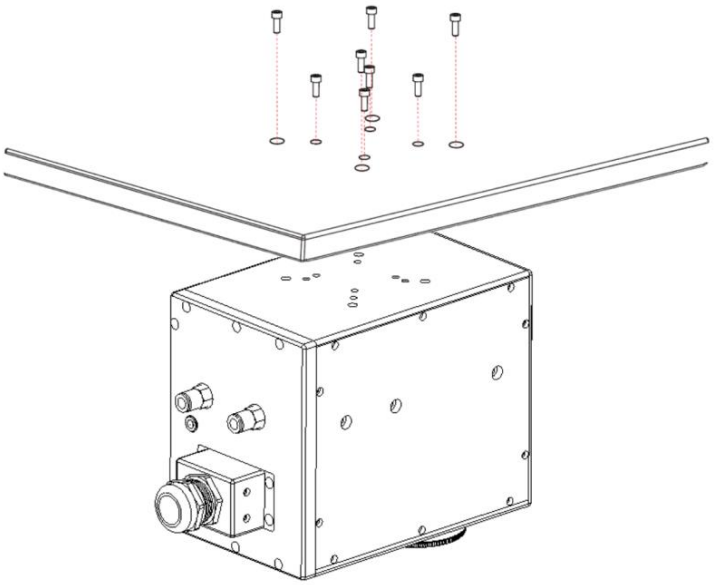

Side-mounted Installation

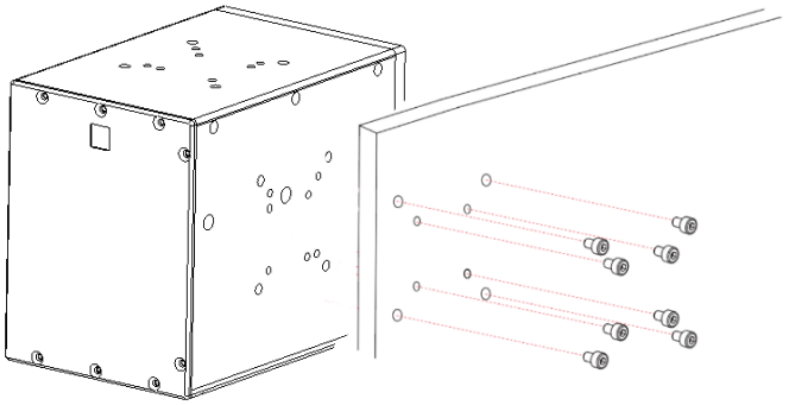

3.5 Extraction System

To remove potentially hazardous marking by-products generated during material processing, it is recommended to install an extraction system.

The extraction system should be positioned to capture these by-products directly at the point of origin. This also prevents dust particles from contaminating and gradually damaging the optical components of the laser system.

We offer various extraction systems as optional accessories. If an extraction unit is included in the delivery scope, the manufacturer's operating instructions will be provided accordingly.。

3.6 Startup

- Verify compliance with all safety regulations.
- If equipped, activate the extraction system.
- Turn on the power to the water chiller.
- Press the main power switch located on the rear panel of the system.
- The display will illuminate, and the laser system will enter its initialization phase. This process may take 1-2 minutes. Upon completion, the system will be in standby mode.
- Access the required marking file via the touchscreen interface.
- Adjust the laser power and marking parameters to begin the marking process.

3.7 Shutdown

- Conclude the marking process.
- Press and release the button on the rear of the unit to de-energize the system.
- Turn off the power to the water chiller.
- If an extraction system is present, deactivate it.

3.8 Working Distance Adjustment

After powering on the system, navigate to the "Marking Settings" interface and select the "Red Beam Focus" function. This will activate two red aiming beams projected below the galvanometer, forming two distinct red dots on the target surface. Adjust the vertical positioning screw on the laser unit's mount until the two dots coincide into a single point (or achieve the closest possible proximity).

Alternatively, the working distance can be set by directly measuring from the lowest edge of the F-theta lens to the product surface, ensuring it matches the specified working distance (refer to parameters in Chapter 2.4). Finally, verify and fine-tune the setting based on the sharpness of the marked image (or the intensity of the plasma spark during marking). The actual working distance may slightly deviate from the theoretical value; always optimize based on the actual marking results.

3.9 Electric Eye and Fiber Optic Sensor

The Autonics fiber optic sensor used with this product is shown in the figure below:

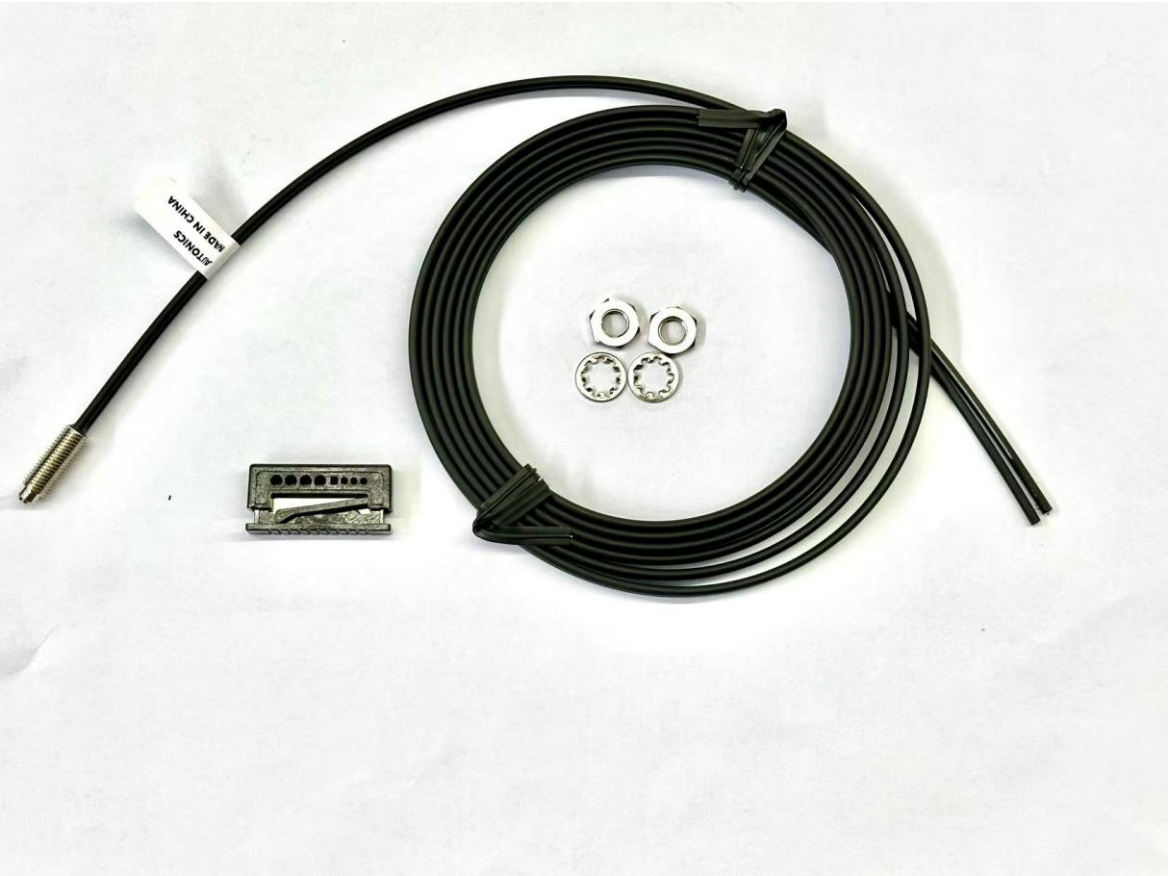

The Autonics fiber optic sensor (amplifier unit) used with this product is shown in the figure below:

The fiber optic sensor mounting bracket used with this product is shown in the figure below:

This laser marking system does not include a synchronizer as standard equipment. If a synchronizer is required, it must be purchased separately as an additional option. The synchronizer is available as an optional accessory for this product series.

4. Laser System Operation

Refer to the Software Operation Manual.

5. Cooling System

The cooling system for the F72XXU-T Series Ultraviolet Laser Marking System is illustrated below:

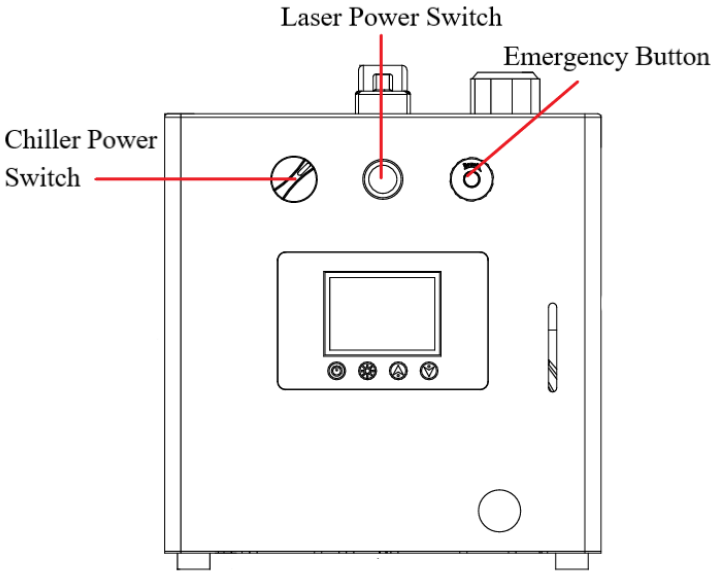

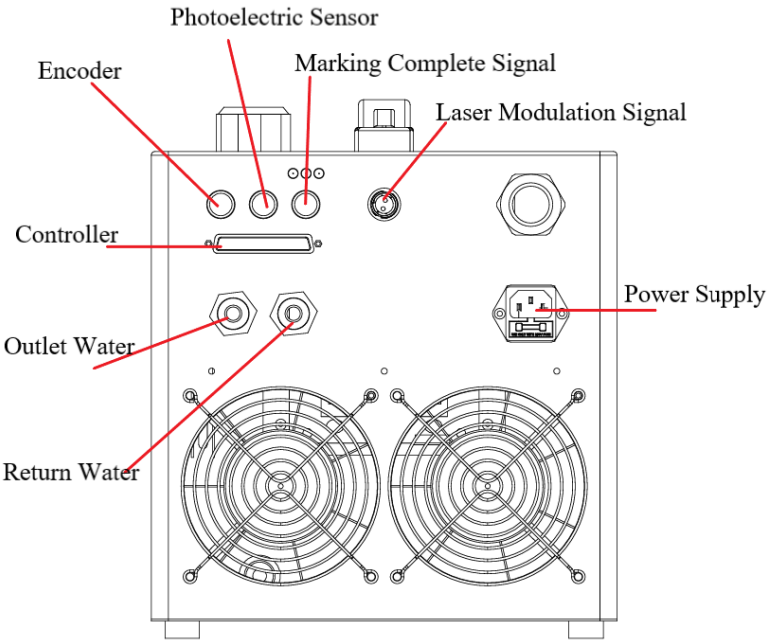

5.1 Cooling System Water Flow Diagram

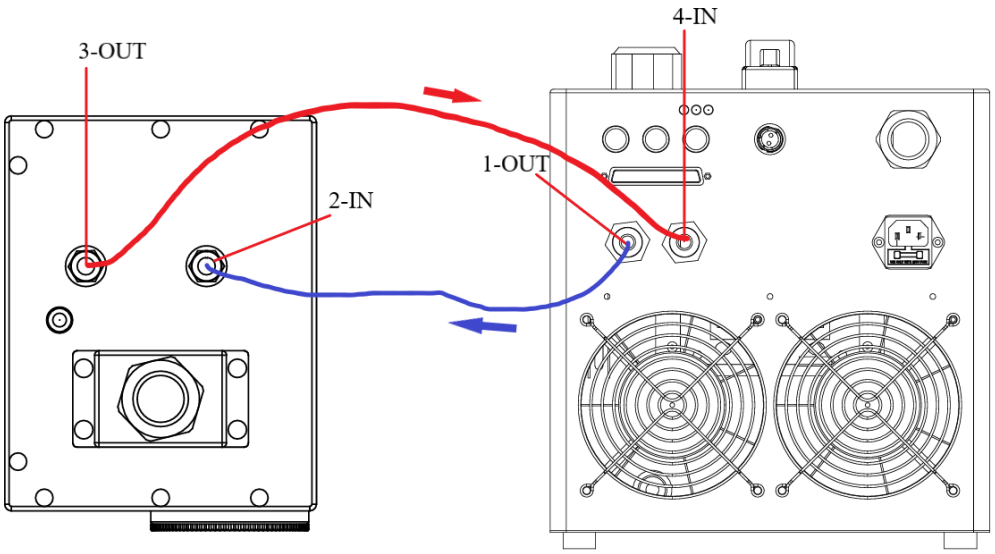

5.2 Cooling System Technical Specifications

Rated Voltage / Frequency	220V/50-60Hz
Rated Power / Power Input	280W
Max. Power Consumption	350W
Cooling Capacity	420W
Temperature Control Range	15~35℃
Temperature Stability / Control Accuracy	±0.1℃
Refrigerant	R134a
Pump Head	20m
Max. Pump Flow Rate	24L/min
Recommended Coolant Type	Water / Glycol Water Solution
Ambient Temperature Range (Operating)	0~45℃
Storage	-10℃ ~60℃

Temperature Range		

1. Ensure the machine operates at a stable voltage and that the power frequency matches the specifications. The rated voltage is 220-240V with a frequency of 50-60Hz.

2. Verify that the power outlet maintains good contact and the ground wire is reliably grounded.

3. Use only purified water, deionized water, or other clean antifreeze coolant in the system. Prevent impurities from entering the reservoir, as they can affect the pump's service life. Operation without coolant is strictly prohibited.

4. Ensure all external water connections are free from kinks or sharp bends. Secure all joints with hose clamps or cable ties.

5. The internal reservoir capacity is approximately 1.8 liters. When refilling, add coolant slowly to prevent overflow.

6. Operation is strictly prohibited when the coolant level in the reservoir falls below the minimum level mark.

7. The ambient temperature for the cooling system must not exceed 45°C. Do not operate the system in environments containing corrosive gases or liquids；

8. Maintain clear and unobstructed air intake and exhaust vents for the chiller unit. Ensure a minimum distance of 50 cm from obstacles for the exhaust vent and 30 cm for the intake vent.

9. Condensation may form on the water lines and cooled component surfaces when the water temperature is lower than the ambient temperature and the ambient humidity is high. If this occurs, it is recommended to increase the water temperature or insulate the water lines and the cooled components.

10. If the ambient temperature drops below 0°C, a specific proportion of ethylene glycol must be added to the coolant. This prevents the water lines from freezing due to low temperatures and avoids damage to the water circuit.

11. Avoid overfilling the reservoir, as this prevents coolant from overflowing when the unit shuts down.

12. If the unit produces significant abnormal noise or exhibits any other unusual operational conditions, cease operation immediately, turn off the power, and contact our company's authorized technical personnel.

13. When using compressed air to purge the coolant from the water lines, ensure that high-pressure air is not used, as it can damage the water circuit or the pump.

14. Do not disassemble or modify the unit for any other purpose. This product is industrial equipment and must not be operated by untrained personnel.

5.3 Coolant Mixture Reference Guide

WARNING：

If the ambient temperature falls below 0°C, a specified proportion of ethylene glycol must be added to the coolant to prevent water line freezing and potential damage to the cooling circuit.

In sub-zero conditions, if the system is shut down or temporarily idle, the coolant must be completely purged from the circuit using compressed air.

Furthermore, even with an appropriate ethylene glycol mixture, extended system inactivity in low-temperature environments can still cause the coolant to freeze, resulting in permanent damage to the water circuit.。

Ethylene Glycol to Water Mixture Reference

Ethylene Glycol Content (%)	Sub-zero Temperature (°C)	Ethylene Glycol Content (%)	Sub-zero Temperature (°C)	Ethylene Glycol Content (%)	Sub-zero Temperature (°C)
1.8	-0.6	20.3	-9.0	39.8	-26.0
3.6	-1.3	22.2	-11.0	41.8	-28.0
5.4	-2.0	24.1	-12.0	43.8	-31.0
7.2	-2.7	26.0	-13.0	45.8	-33.0
9.1	-3.5	28.0	-15.0	47.8	-36.0
10.9	-4.4	29.9	-17.0	49.8	-38.0
12.8	-5.3	31.9	-18.0	51.9	-41.0
14.6	-6.3	33.8	-20.0	53.9	-44.0
16.5	-7.3	35.8	-22.0	56.0	-48.0
18.4	-8.0	37.8	-24.0	78.9	-47.0

5.4 Cooling System Installation Instructions

Initial Startup Procedure for New Chiller Units:。

1. Unpack the unit and inspect the chiller for any physical damage. Verify that all accessories are complete.
2. Connect the water lines between the chiller and the laser head, the laser head and the power supply unit, and from the power supply unit back to the chiller's return port.
3. For integrated reservoir models, unscrew the filler cap and add coolant. The fluid level must exceed the MINIMUM level mark. For optimal performance, it is recommended to fill to the MAXIMUM level mark. The total capacity is approximately 1.8 liters. Use deionized water, purified water, or other clean antifreeze coolant. The use of tap water is strictly prohibited.
4. After filling, securely tighten the vent port and filler port caps.
5. Ensure all external water connections are securely made before initiating the startup procedure. The inlet and outlet ports are G1/2 internal threads (pre-equipped with 10mm quick-connect fittings). Adapters can be used if necessary.
6. Connect the control unit to a 220V AC power source and switch on the main power. Upon power-up, the chiller will be in a standby state. Startup must be initiated via the control panel. Refer to the next section for detailed operating instructions.
7. If the external water circuit is extensive, the coolant level may drop slightly after the first startup. If necessary, top up the coolant appropriately through the filler port.

5.5 Chiller Display Screen Operating Instructions

The display screen is divided into a display area and an operation area, as shown in the figure above.

Display Area: This includes indicators such as Run, Stop, Fault, Cooling, and Heating.

Run Indicator: When illuminated, it indicates the system is powered on (the AUTO indicator in the upper right corner will also be lit, signifying that the water temperature is under automatic control).

Stop Indicator: When illuminated, it indicates the system is in a stopped state (including both powered-off and fault conditions).

Flow Indicator: Indicates that the adjacent numerical value represents the flow rate (this indicator remains off for products without flow monitoring capability).

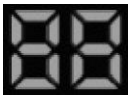

Real-time Flow Rate: This area displays two types of information (products without flow monitoring capability only have function b):

a) During normal operation, it shows the real-time flow rate. Example: "58" indicates a flow rate of 5.8 L/min, "A0" indicates a flow rate between 10.0-10.9 L/min, and "A3" indicates a flow rate between 13.0-13.9 L/min.

b) During a fault condition, it displays the fault code.

Fault Indicator: When illuminated, it indicates a fault condition has been detected in the chiller unit.

Dynamic Flow Indicator: The three arc icons cycle through illumination when the flow rate is non-zero; they flash synchronously when the flow rate is zero.

Compressor Speed Indicator: When the chiller is equipped with a DC compressor, this icon displays the actual compressor speed. When an AC compressor is used, a fixed speed value is displayed here.

Cooling Indicator: When illuminated, it indicates the compressor is actively operating, signifying the system is in a cooling state.

Heating Indicator: When illuminated, it indicates the internal heating element is actively operating.

High Temperature Alarm Indicator: When illuminated, it signifies that the current water temperature exceeds the preset high limit.

Set Value: Under normal conditions, this area displays the preset target temperature; when configuring flow alarm thresholds, it displays the threshold value.

Actual Water Temperature: Indicates the current water temperature.

Operation Area: Contains four keys. A short beep will sound for a valid press; no response will occur for an invalid press. The specific descriptions are as follows:

On/Off Key: A single press toggles the power on or off.

Set Key: A single press enters the setting interface. At this time, the real-time flow rate display area on the screen will switch to showing the corresponding parameter code or setting value.

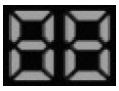

displaying "F0". With each subsequent press of the Set Key, this area will cycle through the four codes: "F0", "F1", "F2", and "F3".

"F0" indicates that the target temperature can be set.

"F1" indicates that the high-temperature alarm value can be set.

"F2" indicates that the low-temperature alarm value can be set.

"F3" indicates that the flow alarm threshold can be set.

The location for displaying the set value is shown in the figure below:

Pressing the Set Key once more while in the "F3" interface will return the display to the normal operating state. If the display remains on any of the setting interfaces ("F0", "F1", "F2", or "F3") for more than 10 seconds without any key press detected, it will automatically revert to the normal display state. The specific descriptions are summarized in the table below:

Code	Parameter	Range	Factory Default	Remarks
F0	Set Temperature	10-35℃	25℃	The target operating temperature.
F1	High Temperature Alarm	0-10℃	3℃	An alarm (coded "E5") is triggered when the water temperature exceeds the value of F0 + F1.
F2	Low Temperature Alarm	0-10℃	3℃	An alarm (coded "E6") is triggered when the water temperature falls below the value of F0 - F2.
F3	Flow Alarm Threshold	1-10L/min	3L/min	An alarm (coded "E4", displayed flashing) is triggered when the water flow rate is less than the F3 value.

Note: Models without flow monitoring capability do not support the F3 setting function/option.

"UP" Key: In the setting interface, a single press increases the value of F0-F3; a long press enables continuous increment.

"DOWN" Key: This key has two functions:

1) In the setting interface, a single press decreases the value of F0-F3; a long press enables continuous decrement.

2) In an E5 or E6 fault state, a single press of this key disables the buzzer alarm for 10 minutes (the fault code displayed on the screen remains; only the sound is turned off).

5.6 Fault Codes and Output Port Description

When the system is in a fault or alarm state, the Fault Indicator on the display illuminates, the real-time flow rate display area shows the fault code, and the buzzer sounds an alarm. Simultaneously, the alarm interface (3-pin aviation socket) outputs a corresponding switch signal. The fault codes are described in the table below:

Fault Code	Fault Description	Buzzer	Signal Pins 1、2	Signal Pins 1、3
Normal			Open Circuit	Closed Circuit
E1	Temperature Sensor Fault	steady tone	Closed Circuit	Open Circuit
E2	Temperature Sensor Fault	2 beeps in a cycle	Closed Circuit	Open Circuit
E3	Insufficient Coolant Level in Reservoir	3 beeps in a cycle	Closed Circuit	Open Circuit
E4（Alternates flashing with the real-time flow rate.）	Flow Rate Below Set Threshold (Non-Shutdown Alarm)	4 beeps in a cycle	Closed Circuit	Open Circuit
E4（Steady On）	Flow Rate Below 1.7 L/min (Shutdown)	4 beeps in a cycle	Closed Circuit	Open Circuit
SE5	Water temperature exceeds the high-temperature alarm threshold	5 beeps in a cycle	Closed Circuit	Open Circuit
E6	Water temperature falls below the low-temperature alarm threshold	6 beeps in a cycle	Closed Circuit	Open Circuit
Signal Interface Pinout and Wire Color Definitions		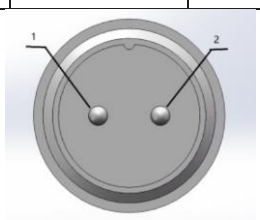 Pin 1: Red or Brown; Pin 2: Black;		

5.7 Troubleshooting

Fault Phenomenon	Possible Cause	Corrective Action
No power on startup	Poor power connection	Check the power inlet and ensure the power cord plug is fully inserted and securely connected.
	Glass Fuse Blown	Replace the fuse located in the power socket on the rear panel of the unit.
E4 Flow Shutdown Alarm (Display shows E4 and unit stops)	Water flow rate below 1.7 L/min	1.Verify the coolant level in the reservoir. 2.Check if the water pump is operating. 3.Inspect the water lines for kinks, blockages, or disconnections.
Flow Alarm (Fault code E4 and the real-time flow rate alternate flashing on the display). When testing by directly connecting a water hose between the outlet and inlet ports, no water flow is observed.	Flow rate below the set threshold (F3) Insufficient coolant level in the reservoir	Check the sight glass and add coolant above the minimum level mark. Inspect the water circuit for leaks and ensure all water connections are tight. Decrease the F3 value.
Flow alarm occurs when connected to the equipment (Fault code E4 and the real-time flow rate alternate flashing on the display), but water	Water flow rate is below the set threshold. The water circuit is blocked or the water lines are kinked/deformed.	Inspect the water circuit. Decrease the flow alarm threshold (F3 value).

flow is observed and no alarm is triggered when the water hose is directly connected between the outlet and inlet ports.		
Over-temperature Alarm (Fault code E5 displayed on the screen)	Dust filter clogged, causing poor heat dissipation.	Regularly remove and clean the dust filter.
	Poor ventilation at the exhaust or intake vent.	Ensure unobstructed airflow at both the exhaust and intake vents.
	Low or unstable voltage.	Improve the power supply circuit or use a voltage stabilizer.
	Heat load exceeds capacity.	Reduce the heat load or select a model with a higher cooling capacity.
	High-temperature alarm threshold (F1) is set too low.	Increase the high-temperature alarm threshold (F1 value).
Low Temperature Alarm (Fault code E6 displayed on the screen).	Set temperature is too high upon startup, while the coolant temperature in the reservoir is too low.	Allow the system to stabilize automatically.
	Low-temperature alarm threshold (F2) set too low	Increase the F2 value
Severe Condensation Formation	Water temperature is significantly lower than the ambient temperature, combined with high humidity.	Water temperature is significantly lower than the ambient temperature, combined with high humidity.
Slow drainage	Filler port is not	Open the filler

	from the drain port during coolant replacement	open	port

5.8 Chiller Maintenance and Care

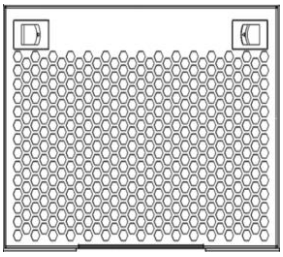

1. Regularly clean the air intake filter. It is recommended to do this monthly.

2. Regularly replace the circulating coolant. It is recommended to do this every 30 to 45 days. To drain the system, open both the drain port and the vent cap simultaneously. During drainage, flush the water lines by performing the following sequence 2-3 times: "Fill with water – Run the unit briefly – Drain completely". Alternatively, use compressed air to purge any residual water from the lines.

3. If the system is shut down or will be temporarily unused, the coolant MUST be completely purged from the water circuit using compressed air. This is especially critical in low-temperature conditions. Stagnant water in an idle system can freeze and cause permanent damage to the water circuit.

WARNING:

When using compressed air, do not use high pressure. Low pressure air is sufficient to purge the water. Excessively high air pressure can damage the internal water passages or the reservoir.。

Damage resulting from improper use or maintenance by the user is not covered under the product warranty.

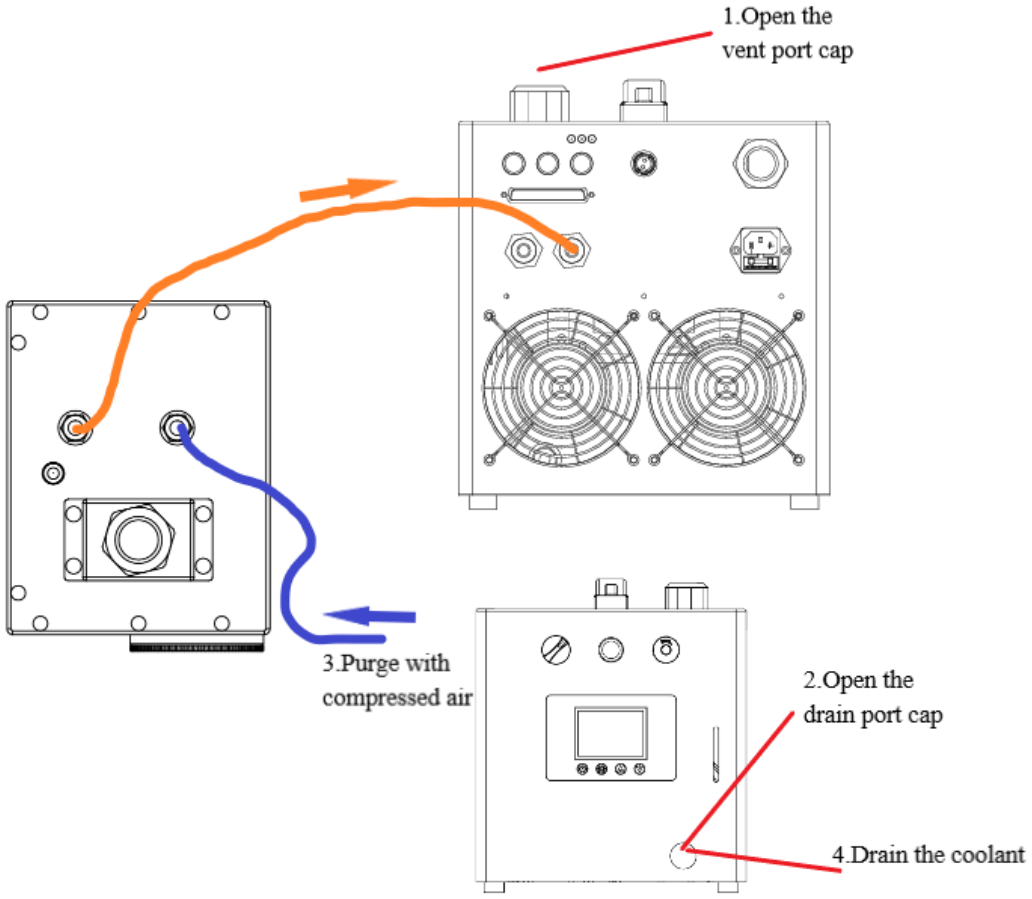
1.Open the
vent port cap
3.Purge with
compressed air
2.Open the
drain port cap
4.Drain the coolant

6. Maintenance

6.1 Maintenance Reminder

Maintenance of the laser system requires minimal time. You are encouraged to perform maintenance tasks promptly according to the specified maintenance intervals. The design of this laser system enables you to carry out all required maintenance safely and efficiently.

WARNING:

- All maintenance work must only be performed by trained and authorized operating and maintenance personnel!
- All maintenance tasks may only be conducted after the power plug has been disconnected from the mains power supply!
- Before cleaning the laser system and peripheral equipment, the power must be disconnected.
- Record all periodically performed maintenance work in the maintenance log!

6.2 Maintenance Schedule

The maintenance intervals are based on the laser system operating approximately 10 hours per day in an environment with a moderate contamination level.

If daily operation exceeds this duration, or if the working environment is heavily contaminated, the maintenance intervals must be shortened accordingly.

1. Completely disconnect the main system power from the AC mains supply.
2. The laser focusing lens must be protected from smoke, water, oil, scratches, and direct contact. Keep it clean at all times.
3. Remove the lens cap before each system startup. After each shutdown, use a rubber blower bulb to remove dust from the lens surface, then replace the lens cap. (We recommend blowing dust off the lens at least once per day, depending on the specific production environment. More frequent cleaning is required in environments with significant smoke or particles. Users should establish a corresponding cleaning protocol based on their operational conditions.)
4. Clean the lens promptly if contamination or dust is present.
5. If the system remains idle for extended periods, switch off the main power and cover the laser head and control unit with protective drapes to prevent dust accumulation and moisture ingress.

Maintenance Interval

- Monthly: Inspect the focusing lens on the optical print head for contamination; if soiled, clean the lens. Check the cooling air ducts for blockages; if obstructed, clear any blockages.
- Monthly, or when the maintenance indicator is lit (whichever comes first): If an extraction system is installed, replace the filter bag.

- Quarterly (or more frequently under severe contamination): Perform a visual inspection of the laser system.
- Semi-annually: If an extraction system is installed, replace the activated carbon filter.

6.3 Focusing Lens Cleaning

The focusing lens is located in the print head and can become contaminated by dust particles or airborne aerosols. Such contamination can damage the lens and adversely affect marking quality; therefore, the focusing lens must be cleaned regularly.

Under normal circumstances, only the outer lens surface requires cleaning. Also inspect the inner surface facing the print head for cleanliness and clean it if necessary.

WARNING：

- Certain focusing lenses are made of coated zinc selenide, a material that contains substances hazardous to health.
- Always wear latex gloves when cleaning the focusing lens! If the lens is accidentally touched with bare hands, immediately wash hands thoroughly with ample water and soap. Take care to avoid scratching the lens surface. Do not inhale any material dust. In case of lens breakage, carefully collect all fragments, seal them in a plastic bag, and dispose of them as hazardous waste.

NOTE：

- All optical components are high-precision parts manufactured to stringent specifications!
- Even minor damage to the lens surface may (from a long-term perspective) cause component failure or result in compromised marking quality. Therefore, any contamination on the surface must be removed exclusively with optical cleaning paper and acetone.

IMPORTANT：

- Required for focusing lens cleaning: optical cleaning paper, acetone, protective gloves.
- Wear protective gloves during all operations!

CAUTION：

- Do not use factory-supplied compressed air for cleaning.
- The lens must never be cleaned with water, as it is not waterproof.
- To avoid potential scratching of the objective lens, which would degrade marking quality, handle with extreme care during cleaning. The lens must be inspected monthly for dust accumulation and, if necessary, cleaned using canned (absolutely clean) compressed air.

For other contaminants, the lens must be cleaned using acetone or an ammonia-based cleaner (such as Windex) with lens tissue or cotton swabs (Q-tips) as follows:

- Hold the optical cleaning paper between your thumb and forefinger, and apply a few drops of acetone to its edge. Alternatively, take an unused cotton swab and immerse one end in the cleaning solution.

- Carefully and slowly wipe the surface to be cleaned using the optical cleaning paper. Alternatively, gently wipe the lens surface with a single, unidirectional stroke per area.
- Inspect the optical cleaning paper or cotton swab. If contamination or oily residue remains, repeat the process using a fresh piece of optical cleaning paper or a new cotton swab.
- Gently wipe off any residual liquid from the lens using the dry end of a new piece of optical cleaning paper or a dry cotton swab.

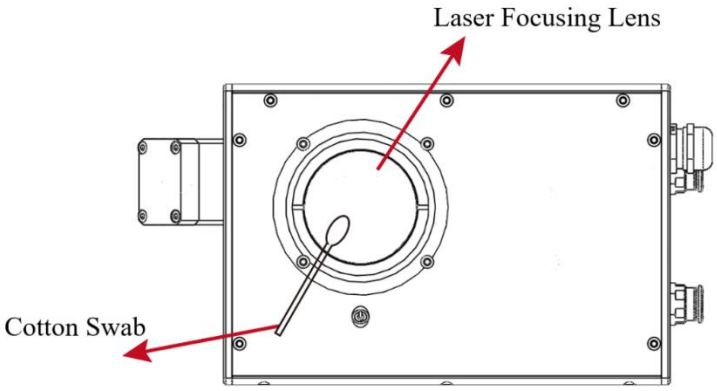

CAUTION:

- Do not allow the protective gloves to come into contact with the surface!
- Apply only gentle pressure with the cleaning paper or cotton swab!

IMPORTANT:

- Never use abrasive polishes! This will permanently damage the focusing lens!
- Do not use soiled optical cleaning paper or cotton swabs.
- Store optical cleaning paper and cotton swabs in a contamination-free manner.

If the stains cannot be removed by the methods described above, or if the scratches on the focusing lens surface are too deep, replace it with a new focusing lens.

6.4 Maintenance, Repair and Replacement Record

We recommend documenting all completed maintenance, repair, and replacement activities in the logbook.

The maintenance schedule specifies the required tasks and their intervals. Proper and timely maintenance minimizes system malfunctions.

Supplementary repair and replacement logs support the maintenance process. You may photocopy these records to maintain a full history of work performed throughout the laser system's entire service life.

7. Faults and Alarm Signals

7.1 Note

This section of the operation manual describes potential faults, their possible causes, and corrective measures. The procedures mentioned here may be carried out by trained and qualified operating and maintenance personnel.

CAUTION:

Troubleshooting tasks described here shall only be performed by specially trained and qualified personnel! Strictly adhere to all safety precautions!

7.2 Fault Description

The laser unit will display messages on the control unit display. The following tables list these messages and the appropriate responses.

Code	Fault	Possible Cause	Possible Consequence	Corrective Action
W001	Conveyor Speed Too High (Out of Tolerance)	Certain marking content cannot be completed because the product leaves the marking area before the process finishes.	Incomplete marking results	1. Corresponding increase of the initial distance. This typically requires repositioning the sensor. 2. Optimize parameters to reduce marking time. 3. Reduce marking content size and minimize marking time. 4. Use faster-processing typefaces to reduce marking time. 5. If possible, select a lens with a larger marking field. 6. Reduce the production line speed or increase the product spacing.
W002	False Triggering	Multiple trigger signals received during the transit time of a single product	Resulting in unexecuted marking for some of the trigger signals.	Increase the product spacing accordingly, adjust the trigger sensitivity, and ensure reliable product detection.
W003	Fume Extractor Malfunction	Fume extractor not started or signal output fault	Inadequate smoke extraction and processing	1. Verify that the fume extractor is started and

				operating correctly. 2. Check if the signal cable is properly connected.
W004	Conveyor Reverse Movement	The system receives an encoder reverse signal or erroneous signals caused by encoder jitter during operation	Distorted or incomplete marking strokes	1. Check if the conveyor line is running in reverse. 2. Verify that the encoder is properly installed. 3. Adjust the production line to ensure smooth operation.
W005	Marking Content Outside Marking Field	The marking content exceeds the boundaries of the user-defined marking field.	Incomplete Marking	1. Reduce marking content size. 2. Select a large-focal-length lens to maximize the marking area.

Code	Fault	Possible Cause	Possible Consequence	Corrective Action
E001	Interlock Fault	The safety interlock switch on the laser unit is not closed.	Marking is disabled.	1. Check that all safety protection devices are closed, for example, the safety door. 2. Check if the interlock switch is damaged. 3. Check if the cable connections are normal.
E002	Marking interrupted. Product moved too quickly.	Certain marking content cannot be completed because the product has already left the marking field before the process finished. If this condition occurs for five consecutive occurrences, this fault alarm will be triggered.	Marking cannot be fully completed. Marking was interrupted.	1. Correspondingly increase the start-sensing distance, which typically requires repositioning the sensor. 2. Optimize parameters to reduce marking time. 3. Reduce the marking content size to shorten the marking time. 4. Use faster-processing

				typefaces to reduce marking time. 5. Reduce the conveyor speed or increase the product spacing. 6. If possible, select a lens with a larger marking field.
E003	Board Connection Error	FPGA communication with host computer failed	Marking cannot be started.	1. Restart the equipment. 2. Check if the cables and their connectors are properly connected. 3. Contact the supplier's service personnel.
E004	Trial period expired.	Encryption authentication between host and slave computers failed.	Marking cannot be started.	1. Restart the equipment. 2. Contact the supplier's service personnel.
E005	Customization Code Error	The customization code does not match the preset value.	Marking cannot be started.	1. In the System Settings interface, check the last four digits of the hardware version. They should normally be 0000. 2. Restart the equipment. 3. Contact the supplier to program the customization code.

E006	Chiller Status Abnormal	The water chiller is not connected or is faulty.	Marking cannot be started.	1. Chiller operating conditions not met. Verify the chiller status: whether it is powered on, whether the temperature has reached the setpoint, and whether there are any active alarms. 2. Check if the signal cable is properly connected. 3. Check the machine settings to determine if the interlock function has been activated while the water chiller is not in use.
E007	Galvanometer Anomaly	The galvanometer is not connected or is faulty.	Marking cannot be started.	1. Check if the galvanometer cables are properly connected. 2. Check if the galvanometer supply voltage is normal (±15 VDC). 3. Check if the galvanometer motor rotates smoothly. 4. Replace the galvanometer.
E008	Fiber Laser Temperature Alarm	The system has received an overtemperature signal from the laser unit.	Marking cannot be started.	1. Verify that the ambient temperature is not excessively high; inspect whether the chassis air filter is clogged.

				2. Check if the laser's heat dissipation is functioning normally and verify that the cooling fan is operating correctly. 3. Replace the laser unit.
E009	Fiber Laser Status Abnormal Alarm	The system has received a status abnormal signal from the laser.	Marking cannot be started.	1. Restart the equipment. 2. Replace the laser unit.
E010	Fiber Laser Master Oscillator Alarm	The system has received a master oscillator fault signal from the laser.	Marking cannot be started.	1. Restart the equipment. 2. Replace the laser unit.
E011	CO_2 Laser Overvoltage Alarm	The system has detected that the laser's supply voltage is too high or too low.	Marking cannot be started.	1. Check whether the low-voltage power supply for the laser meets the standard (48V). 2. Restart the equipment. 3. Replace the laser unit.
E012	CO_2 Laser Fault	The system has received a status abnormal signal from the laser.	Marking cannot be started.	1. Restart the equipment. 2. Replace the laser unit.
E013	CO_2 Laser Overtemperature Alarm	The system has received an overtemperature signal from the laser.	Marking cannot be started.	1. Verify that the ambient temperature is not excessively high. 2. Check if the laser's heat dissipation is functioning normally and verify that the cooling fan is operating correctly.

				3. Replace the laser unit.
E014	UV Laser Fault	The system has received a status abnormal signal from the laser.	Marking cannot be started.	1. Check if the water chiller is operating normally. 2. Check if the laser supply voltage is normal (12/24 VDC). 3. Restart the equipment. 4. Replace the laser unit.

8. Accessories

8.1 Terminal Block

Electric Eye Interface (GX16-3 Pin Connector), compatible only with NPN output type electric eyes. Pinout description is as follows:

Pin	Function	Description
Pin1	IF_12-24V	Power Supply
Pin2	TRIGGER	Electric Eye Signal Input
Pin3	GND	Power Ground

Encoder Interface (GX16-4 Pin Connector), compatible only with NPN output type encoders:

Pin	Function	Description
Pin1	IF_12-24V	Power Supply Output
Pin2	EnCo_SA	NPN Type Encoder A-phase Input
Pin3	EnCo_SB	NPN Type Encoder B-phase Input
Pin4	GND	Ground

Expansion Port (GX16-10 Pin Connector). The pinout description is as follows:

Pin	Function	Description
Pin1	IF_12-24V	Power Output, directly connected to the power supply input at PL14_Pin1.

Pin2	OUT0	Marking Complete Signal, Open Collector (NPN type) output, max. 500mA.
Pin3	OUT1	Ready-to-Mark Signal, Open Collector (NPN type) output, max. 500mA.
Pin4	IN0	E-STOP Signal (Assigned), Active Low, max. 10mA.
Pin5	IN1	Serial Number Reset Signal, Active Low, max. 10mA.
Pin6	IN2	Safety Door Interlock Signal, Active Low, max. 10mA.
Pin7	GND	Ground
Pin8	NC	
Pin9	NC	
Pin10	GND	Ground

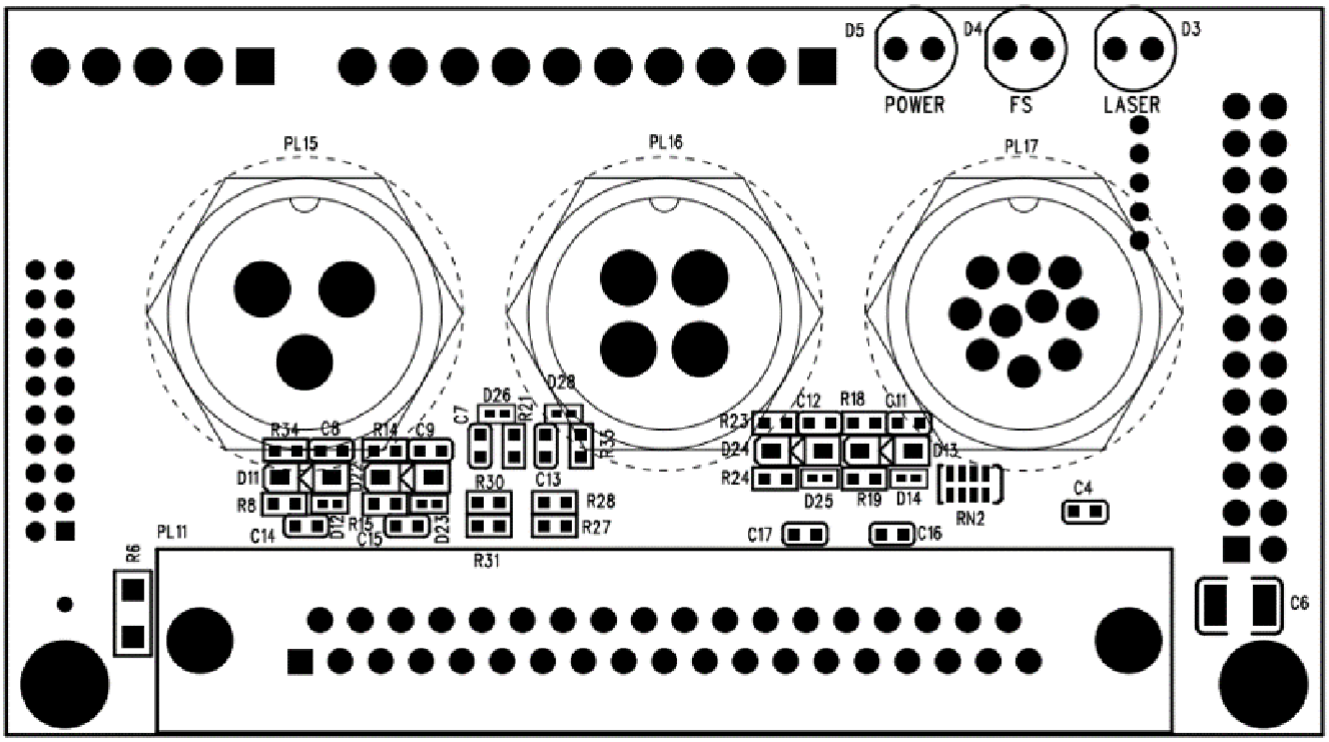

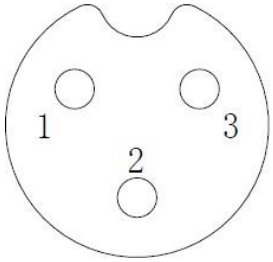

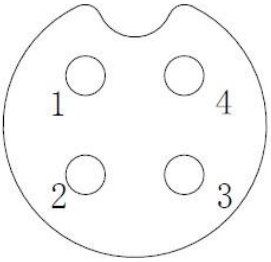

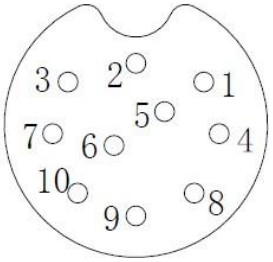

8.2 Input/Output Timing

Normal Operation

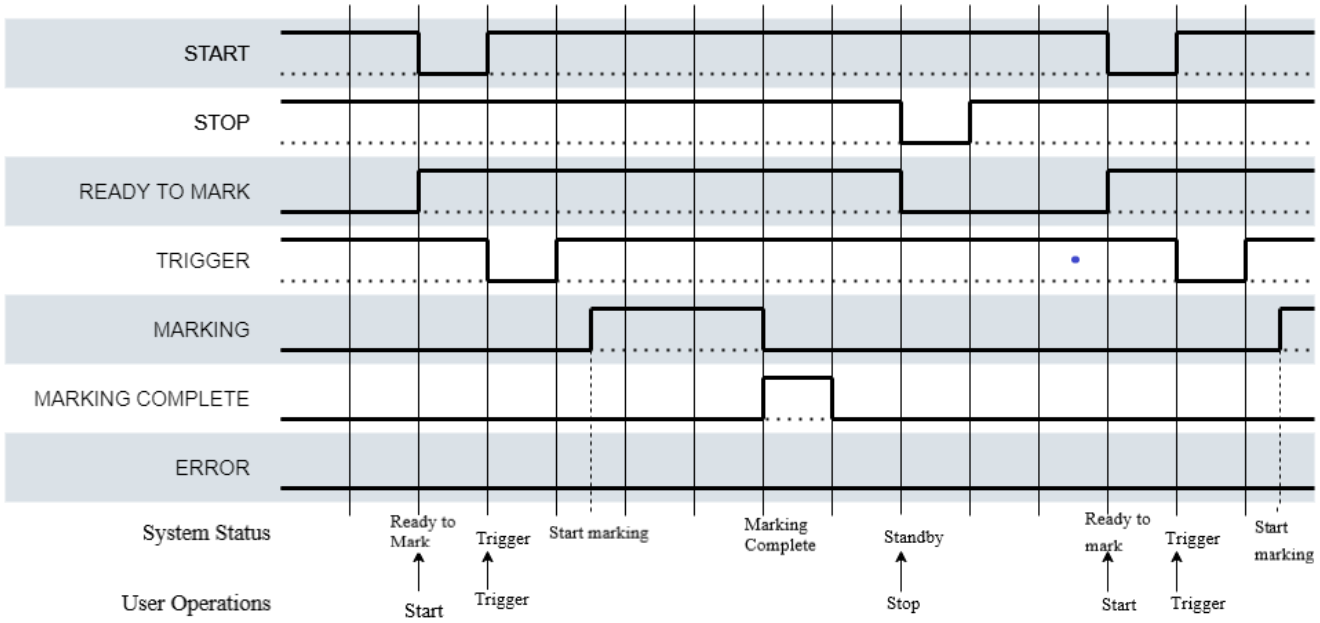
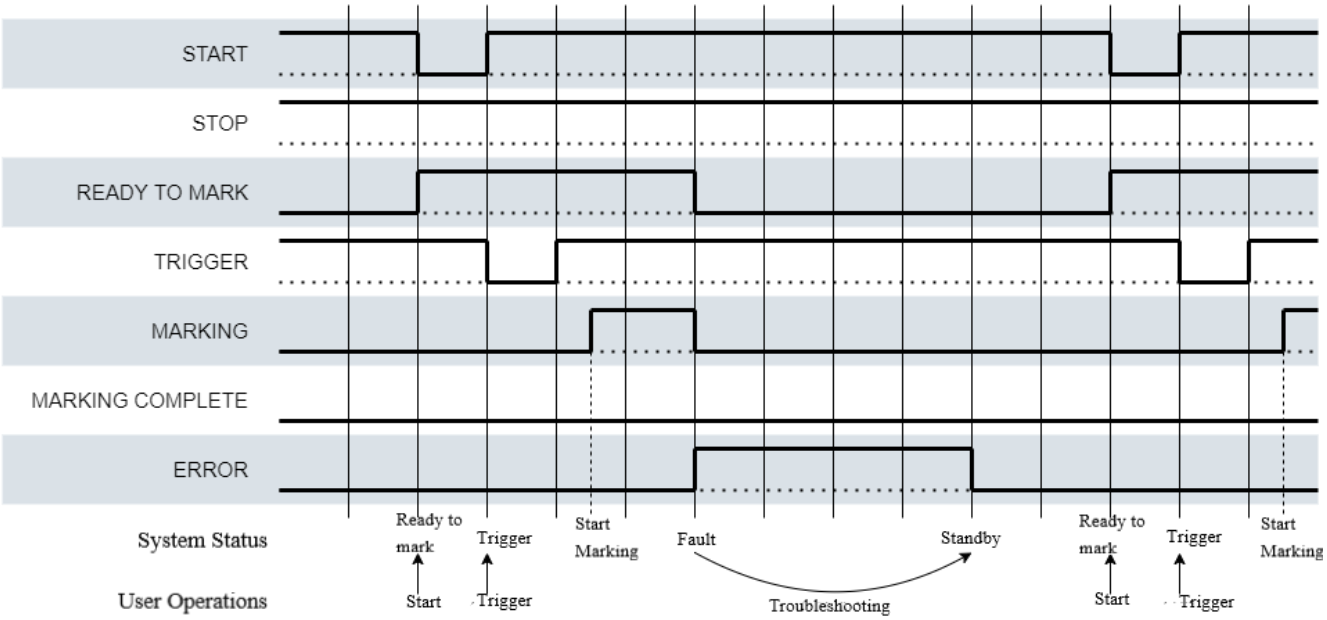
Fault Signal